EIBENSTOCK
Elektrowerkzeuge

Ersatzteilliste

EHR 15.2 SB

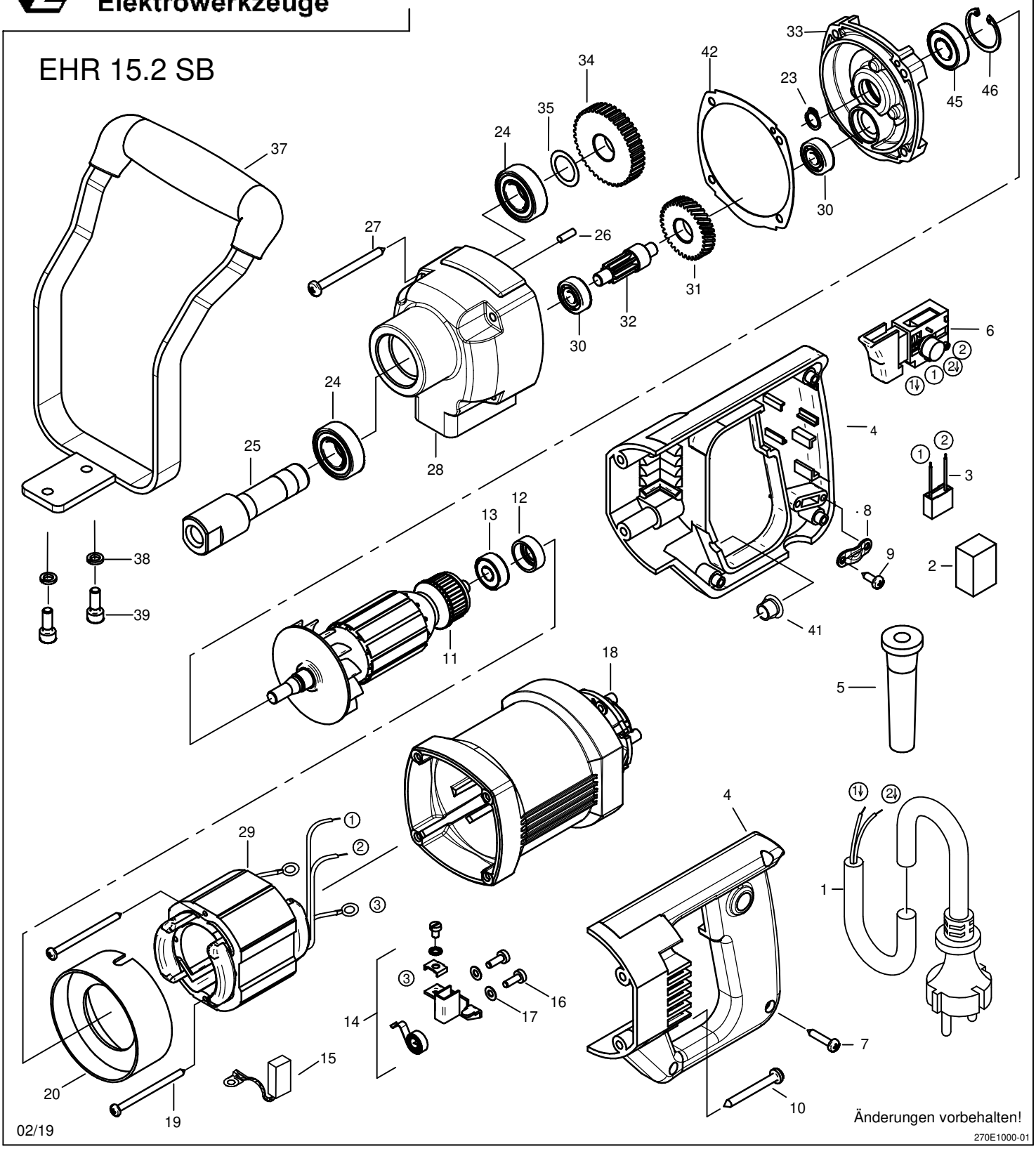

Änderungen vorbehalten!

02/19

270E1000-01

077E5000

EHR 15.2 SB - 230V

Version: 01

Dated: 19.12.2022

Pos.	Description	Item No.	pc.
1	Connecting cable 2x1mm□3m	80600060	1
2	Foam filler	80600306	1
3	Capacitor	80500037	1
4	Pair of handle halves	80900070	1
5	Cable grommet	83000004	1
6	Switch	80600126	1
7	Screw 4,2x22	80201272	3
8	Wire locking flange	85000020	1
9	Screw 4,2x13	80201270	2
10	Screw 4,8x45	80201267	4
11	Rotor, compl. 230V	77117100	1
12	Bearing cap	671I1012	1
13	Grooved ball bearing 608 2Z	80410011	1
14	Brush holder, compl.	80201196	2
15	Carbon brush 6,3x10x18	80700013	2
16	Screw M4x12	80201180	4
17	Spring washer 4	80201385	4
18	Motor housing	6630F044	1
19	Screw 3,9x60	80201266	2
20	Air guiding ring	80900017	1
23	Retaining ring 10x1	80201305	1
24	Grooved ball bearing 6003 2RS	80410043	2
25	Work spindle	77010420	1
26	Grooved pin 4x12	80200582	1
27	Screw 4,8x60	80201285	4
28	Gearbox housing	677D1001	1
29	Stator, compl. 230V	77117150	1
30	Grooved ball bearing 608	80410010	2
31	Intermediate wheel	74010470	1
32	Pinion shaft	74010490	1
33	End shield of gearing	6711P002	1
34	Spindle wheel	74010430	1
35	Shim ring 17x24x0,2	80200507	1
37	Bow handle	80200099	1
38	Spring lock washer 6	80201303	2
39	Screw M6x16	80201122	2
41	Plug	80900012	1
42	Gearbox seal	677D1005	1

Pos.	Description	Item No.	pc.

List also valid for: 077E5V00 Version: 01

070E1000 Version: 01