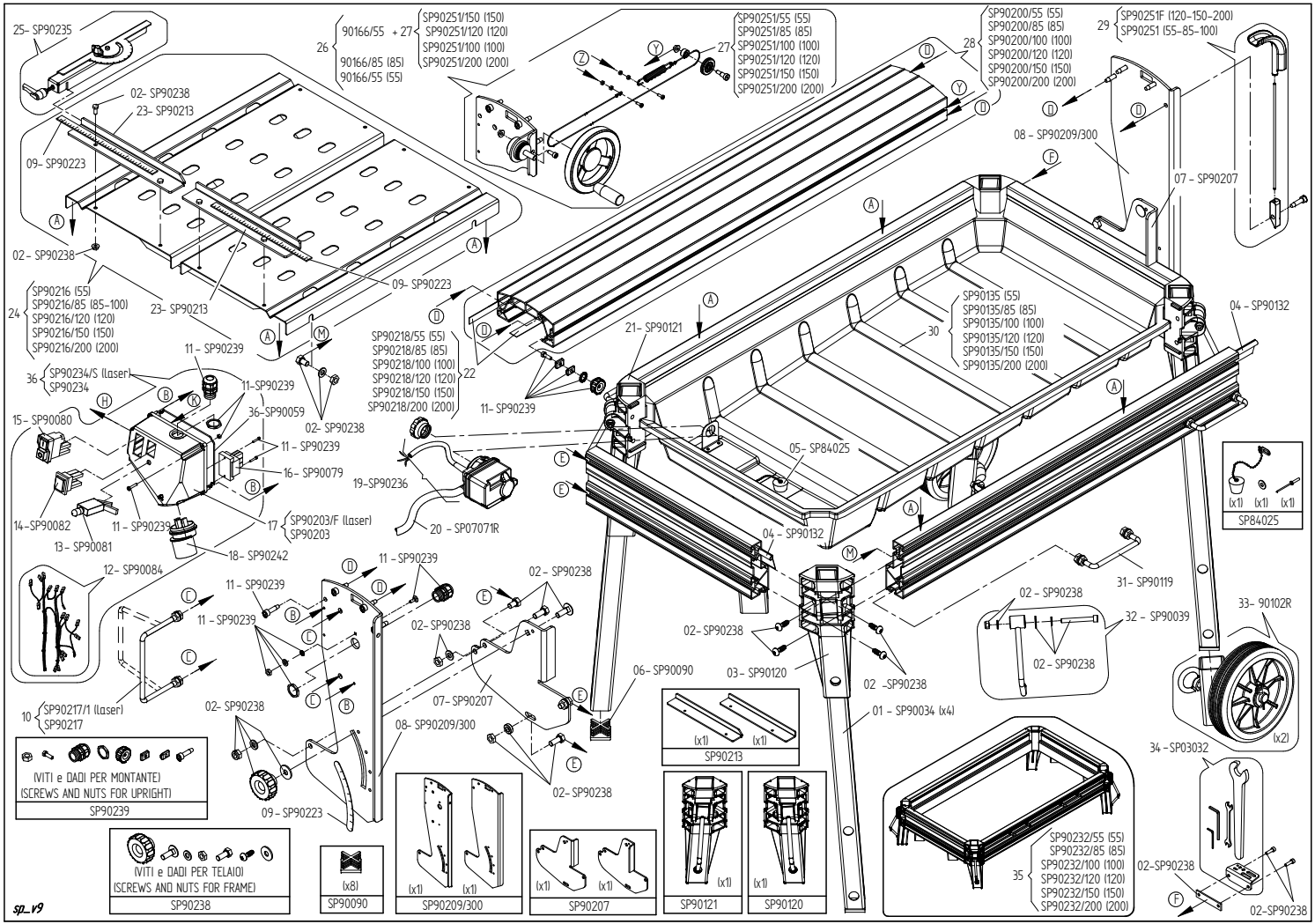
25- SP90235
02- SP90238
23- SP90213
09- SP90223
26 90166/55 + 27 SP90251/150 (150) SP90251/120 (120) SP90251/100 (100) SP90251/200 (200)
90166/85 (85) 90166/55 (55)
27 SP90251/55 (55) SP90251/85 (85) SP90251/100 (100) SP90251/120 (120) SP90251/150 (150) SP90251/200 (200)
28 SP90200/55 (55) SP90200/85 (85) SP90200/100 (100) SP90200/120 (120) SP90200/150 (150) SP90200/200 (200)
29 SP90251F (120-150-200) SP90251 (55-85-100)
08 - SP90209/300
07 - SP90207
24 SP90216 (55) SP90216/85 (85-100) SP90216/120 (120) SP90216/150 (150) SP90216/200 (200)
11 - SP90239
36 SP90234/S (laser) SP90234
36-SP90059
15- SP90080
16- SP90079
14-SP90082
13- SP90081
17 SP90203/F (laser) SP90203
18- SP90242
12- SP90084
10 SP90217/1 (laser) SP90217
22 SP90218/55 (55) SP90218/85 (85) SP90218/100 (100) SP90218/120 (120) SP90218/150 (150) SP90218/200 (200)
21- SP90121
19-SP90236
20 - SP07071R
05- SP84025
30 SP90135 (55) SP90135/85 (85) SP90135/100 (100) SP90135/120 (120) SP90135/150 (150) SP90135/200 (200)
04 - SP90132
31- SP90119
32 - SP90039
33- 90102R
34 - SP03032
03- SP90120
01 - SP90034 (x4)
06- SP90090
08- SP90209/300
09 - SP90223
35 SP90232/55 (55) SP90232/85 (85) SP90232/100 (100) SP90232/120 (120) SP90232/150 (150) SP90232/200 (200)
(VITI e DADI PER MONTANTE)
(SCREWS AND NUTS FOR UPRIGHT)
SP90239
(VITI e DADI PER TELAIO)
(SCREWS AND NUTS FOR FRAME)
SP90238
(x8)
SP90090
(x1) (x1)
SP90209/300
(x1) (x1)
SP90207
(x1)
SP90121
(x1)
SP90120
(x1) (x1)
SP90213
(x1) (x1) (x1)
SP84025
(x2)
SP_V9

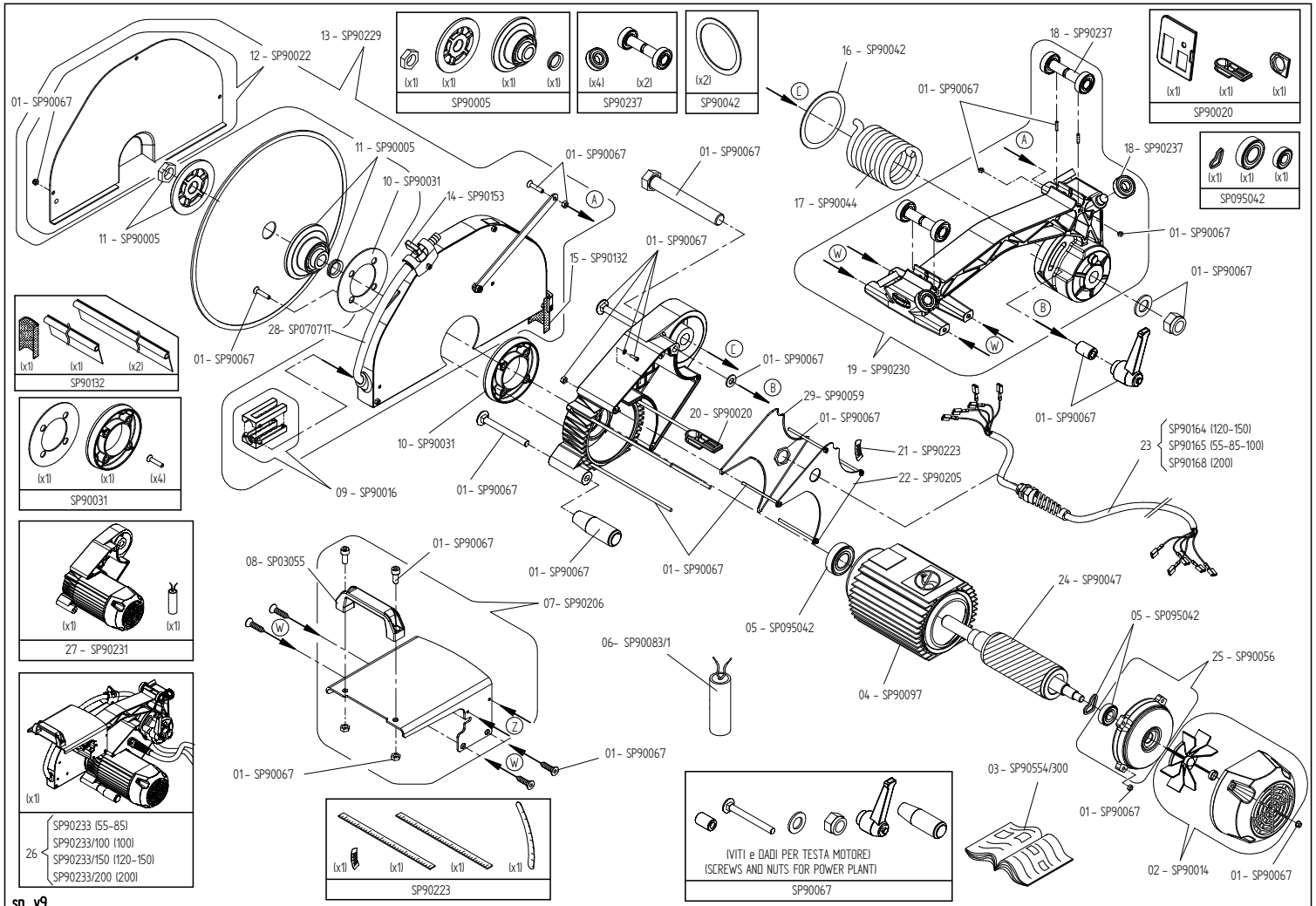
01- SP90067
12 - SP90022
13 - SP90229
11 - SP90005
10 - SP90031
14 - SP90153
15 - SP90132
28- SP07071T
09 - SP90016
16 - SP90042
17 - SP90044
18 - SP90237
19 - SP90230
20 - SP90020
21 - SP90223
22 - SP90205
23
SP90164 (120-150)
SP90165 (55-85-100)
SP90168 (200)
24 - SP90047
25 - SP90056
05 - SP095042
04 - SP90097
02 - SP90014
03 - SP90554/300
06- SP90083/1
07- SP90206
08- SP03055
(x1) (x1) (x1) (x1)
SP90005
(x4) (x2)
SP90237
(x2)
SP90042
(x1) (x1) (x1)
SP90020
(x1) (x1) (x1)
SP095042
(x1) (x1) (x2)
SP90132
(x1) (x1) (x4)
SP90031
(x1) (x1)
27 - SP90231
(x1)
26
SP90233 (55-85)
SP90233/100 (100)
SP90233/150 (120-150)
SP90233/200 (200)
(x1) (x1) (x1) (x1)
SP90223
(VITI e DADI PER TESTA MOTORE)
(SCREWS AND NUTS FOR POWER PLANT)
SP90067

sp_v9

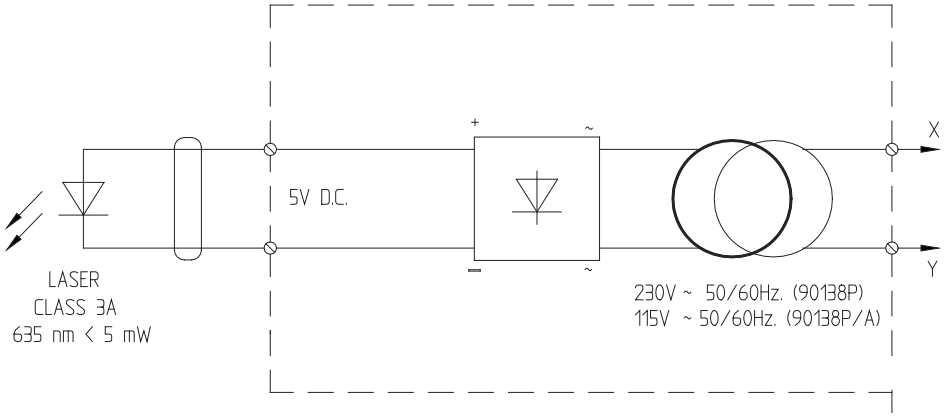
5V D.C.
+
~
−
~
X
Y
LASER
CLASS 3A
635 nm < 5 mW
230V ~ 50/60Hz. (90138P)
115V ~ 50/60Hz. (90138P/A)

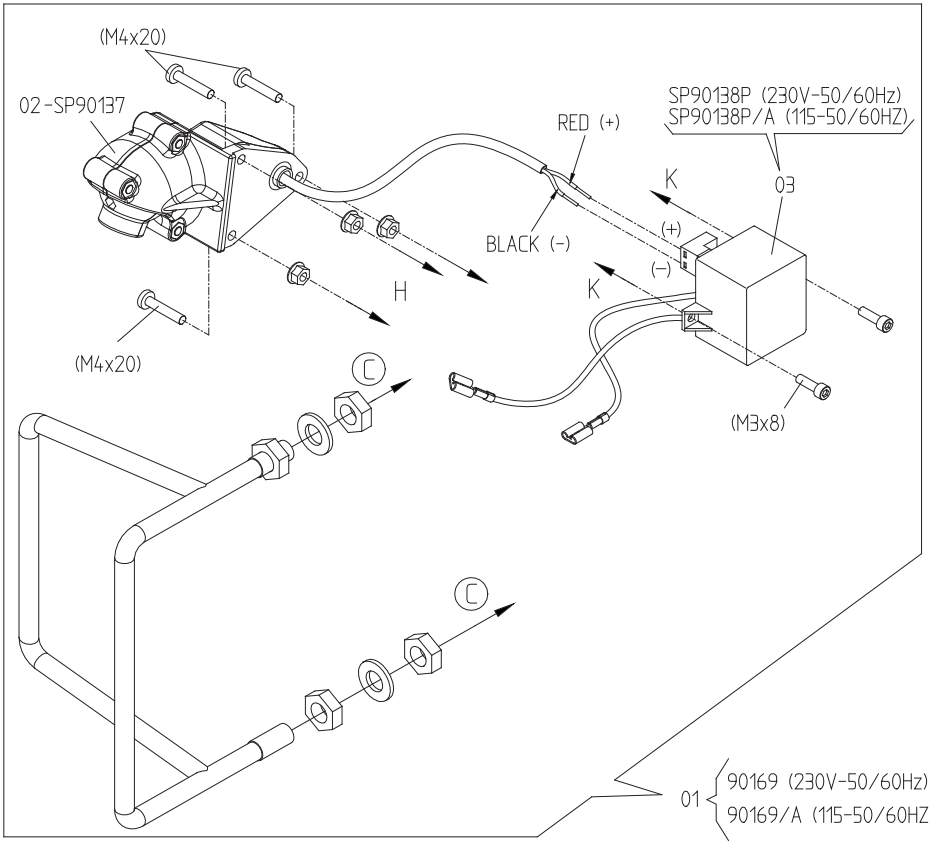
(M4x20)
02-SP90137
RED (+)
SP90138P (230V-50/60Hz)
SP90138P/A (115-50/60HZ)
03
K
(+)
BLACK (-)
(-)
H
K
(M4x20)
C
(M3x8)
C
01
90169 (230V-50/60Hz)
90169/A (115-50/60HZ)

SP.V3